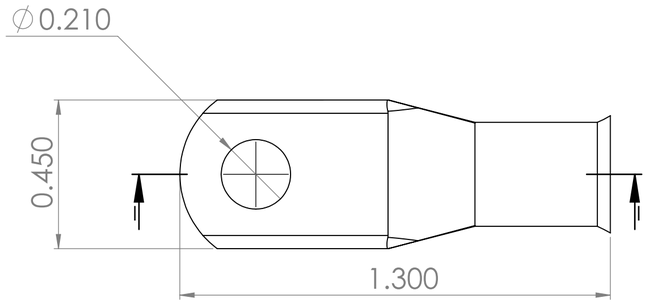

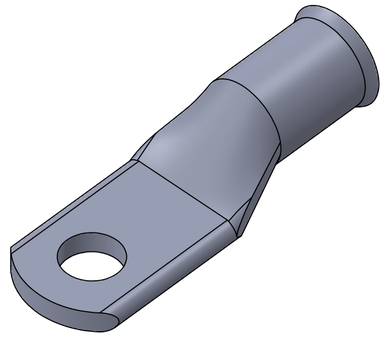

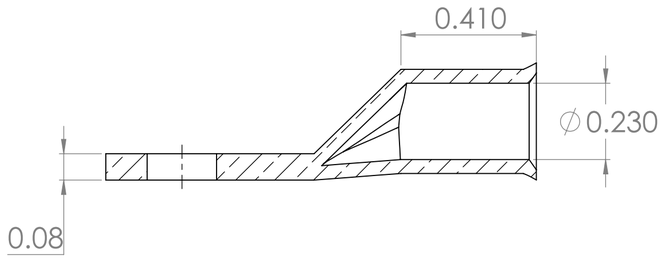

NOTES:-

1)Made from 99.9% pure seamless copper tubes as per ASTM B188
2)UL 486 tested & approved
3)Meets SAE conductivity standards J163 and J1811
4)Flare barrel for easy cable entry
5)Electro tin plate-thickness 2 to 5 Micron
6)Rated for up to 600V D.C.
7)RoHS & REACH compliant

			REVISE ONLY ON CAD SYSTEM
0	03-APL-2020	J.GAJJAR	TITLE: Tinned Copper Battery Cable Lugs
REV NO.	DATE	SIGN	
DIMENSIONS SHOWN IN INCH			
UNLESS OTHERWISE SPECIFIED TOLERLANCES ±10%			SELTERM®
DRAFT WHERE APPLICABLE MUST REMAIN WITHIN DIMENSIONS			DRAWING NO. MD0610P
DRWG. MDD BY 03-APL-2020	CHK'D. JMG BY 03-APL-2020		PART NO. - MD0610P / SHEET NO. 1 OF 1
APP'D. AGP BY 03-APL-2020	SCALE NTS		FILE NAME / DIV / SIZE A

THIS DRAWING CONTAINS INFORMATION THAT IS PROPRIETARY TO SELTERM LLC,USA AND SHOULD NOT BE USED WITHOUT WRITTEN PERMISSSION.