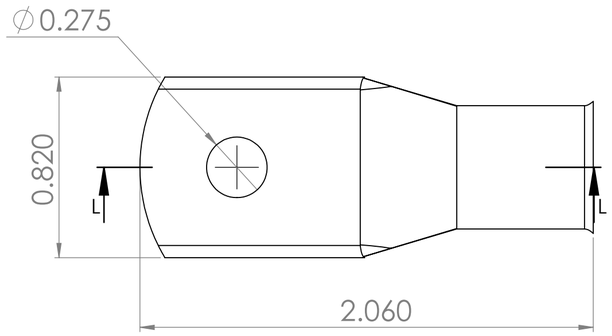

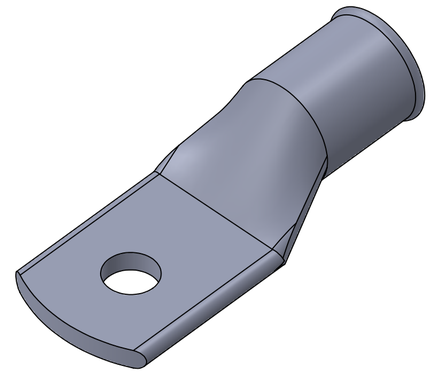

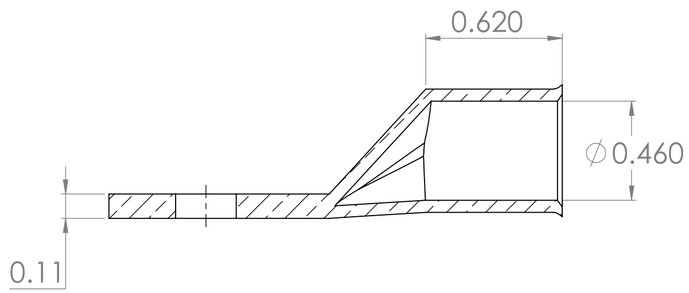

NOTES:-

1)Made from 99.9% pure seamless copper tubes as per ASTM B188
2)UL 486 tested & approved
3)Meets SAE conductivity standards J163 and J1811
4)Flare barrel for easy cable entry
5)Electro tin plate-thickness 2 to 5 Micron
6)Rated for up to 600V D.C.
7)RoHS & REACH compliant

0	03-APL-2020	J.GAJJAR
REV NO.	DATE	SIGN

DIMENSIONS SHOWN IN INCH
UNLESS OTHERWISE SPECIFIED TOLERLANCES ±10%

DRAFT WHERE APPLICABLE MUST REMAIN WITHIN DIMENSIONS

DRWG. MDD BY 03-APL-2020	CHK'D. JMG BY 03-APL-2020
APP'D. AGP BY 03-APL-2020	SCALE NTS

REVISE ONLY ON CAD SYSTEM

TITLE

Tinned Copper Battery Cable Lugs

SELTERM®

DRAWING NO.

MD2014P

PART NO. - MD2014P

SHEET NO. 1 OF 1

FILE NAME

THIS DRAWING CONTAINS INFORMATION THAT IS PROPRIETARY TO SELTERM LLC,USA AND SHOULD NOT BE USED WITHOUT WRITTEN PERMISSSION.

DIV

SIZE A